TOGGLES DOUBLE JAW

High polished stainless steel – AISI 315

TECHNICAL DRAWING

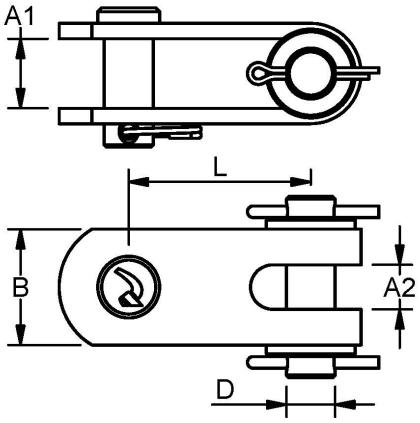

DATA TABLE

DATA TABLE

TOGGLES DOUBLE JAW

ART. NO.	PIN	A1	A2	B	D	L	KG/100	BL	PACK
250008	8	10	5.2	18	8	30	6	2350	BULK
250010	9.5	12	6.2	22	9.5	38	11.9	3500	BULK
250011	11	15	9.2	30	11	42	18	4100	BULK
250012	12.7	18	11.2	30	12.6	47.5	24	6200	BULK
250014	14	18	11.7	35	14	49.7	34.8	9400	BULK
250016	16	20	13.5	35	16	57	41	9800	BULK
250019	19	24	17.5	40	19	63	70	13000	BULK
250022	22	26	19	50	22	72	87	17000	BULK
220025	25.4	29	22	60	25	82	107	24000	BULK
250028	28	34	28	60	28	97	234	25500	BULK
250032	32	40	34	75	32	105	340	31000	BULK
250035	35	44	34	75	35	118	470	43000	BULK
250040	40	48	39	95	40	139	564	69000	BULK

The user is responsible for choosing the proper cable diameter and for correct assembly.